Electric window lifters (4-door)

from September 1991

Position of relays –
also see "Fitting Locations"

Relay plate with fuse holder:

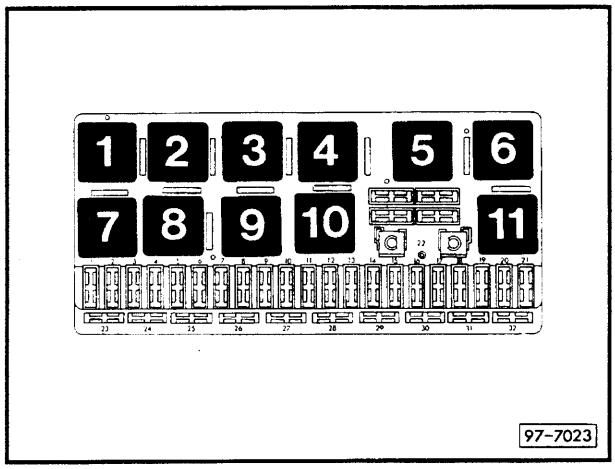

Relay positions:

Auxiliary relay carrier, front
(below dash panel, left)

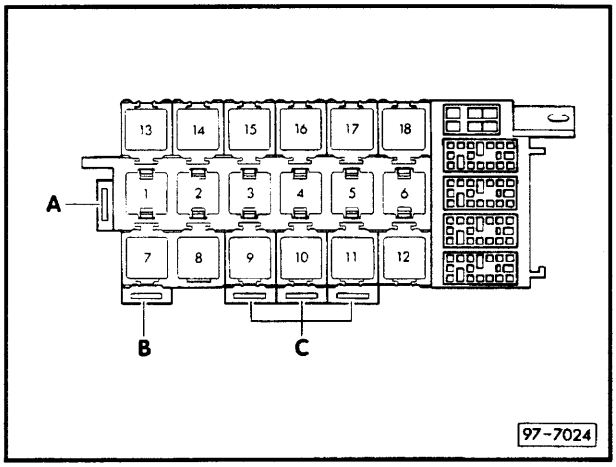

Relay positions:

5
6
Control unit for electric window lifters
(occupies two relay positions)

Auxiliary relay carrier, rear
(under rear seat, left)

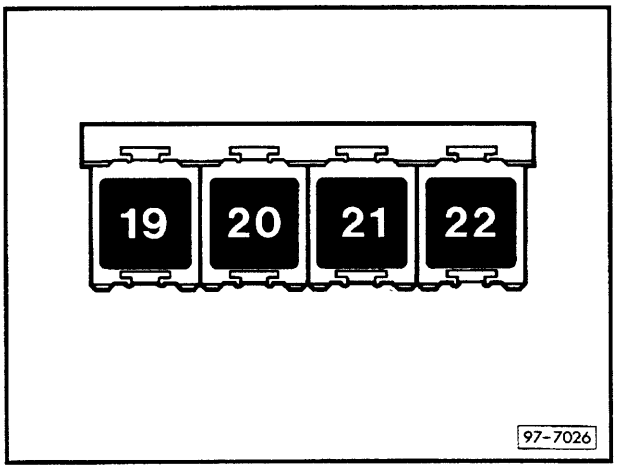

Relay positions:

Fuse colours

30 A – green
25 A – white
20 A – yellow
15 A – blue
10 A – red
5 A – beige

Electric window lifters (4-door)

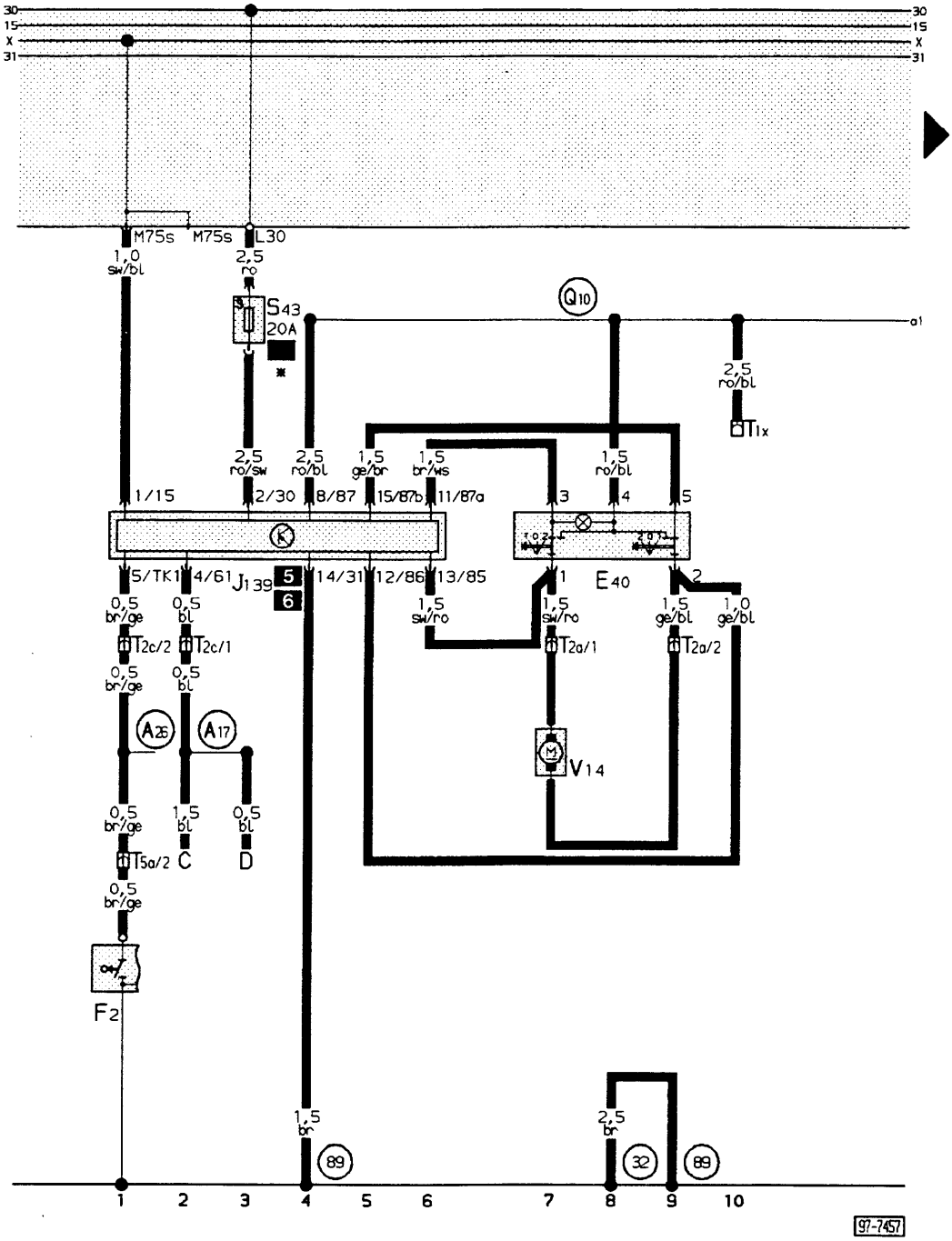

Wiring colours:

bl = blue
br = brown
ge = yellow
gn = green
gr = grey
li = purple
ro = red
sw = black
ws = white

C – Alternator
D – Ignition/starter switch
E 40 – Window lifter switch, front left
F 2 – Front left door contact switch with buzzer contact
J 139 – Control unit for window lifters and sliding roof
S 43 – Window lifter thermo fuse (on aux. relay carrier)
T 1x – Connector single, green, behind dash panel, left
T 2a – Connector 2 pin, in driver's door
T 2c – Connector 2 pin, white, behind dash panel, left
T 5a – Connector 5 pin, brown, connector point in aux. relay carrier
V 14 – Window lifter motor, left

(32) – Earth point, behind dash panel, left

(89) – Earth connection – 1 –, in window lifter wiring loom

(A17) – Connection (61), in dash panel wiring loom

(A26) – Connection (door contact switch/driver side), in dash panel wiring loom

(Q10) – Positive (+) connection (87), in window lifter/ central locking and door contact switch wiring loom

* – fit in any vacant relay position

Note: from September 1992, chassis No. 8CPA094000 onwards there is no longer an automatic close function.
In current track 2, wire 0.5 bl from connection A17 is no longer fitted in connector T2c/1.

Electric window lifters (4-door)

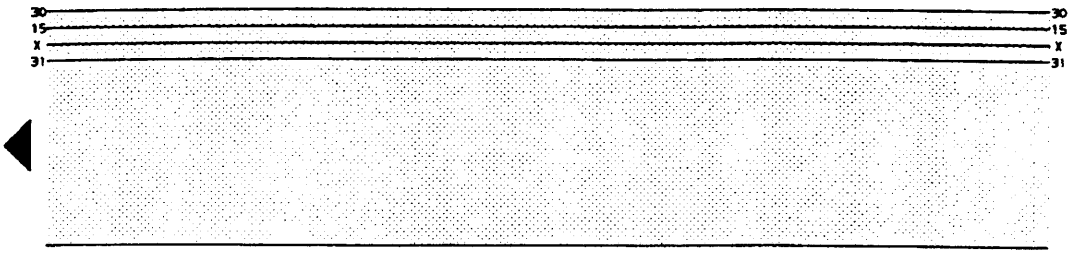

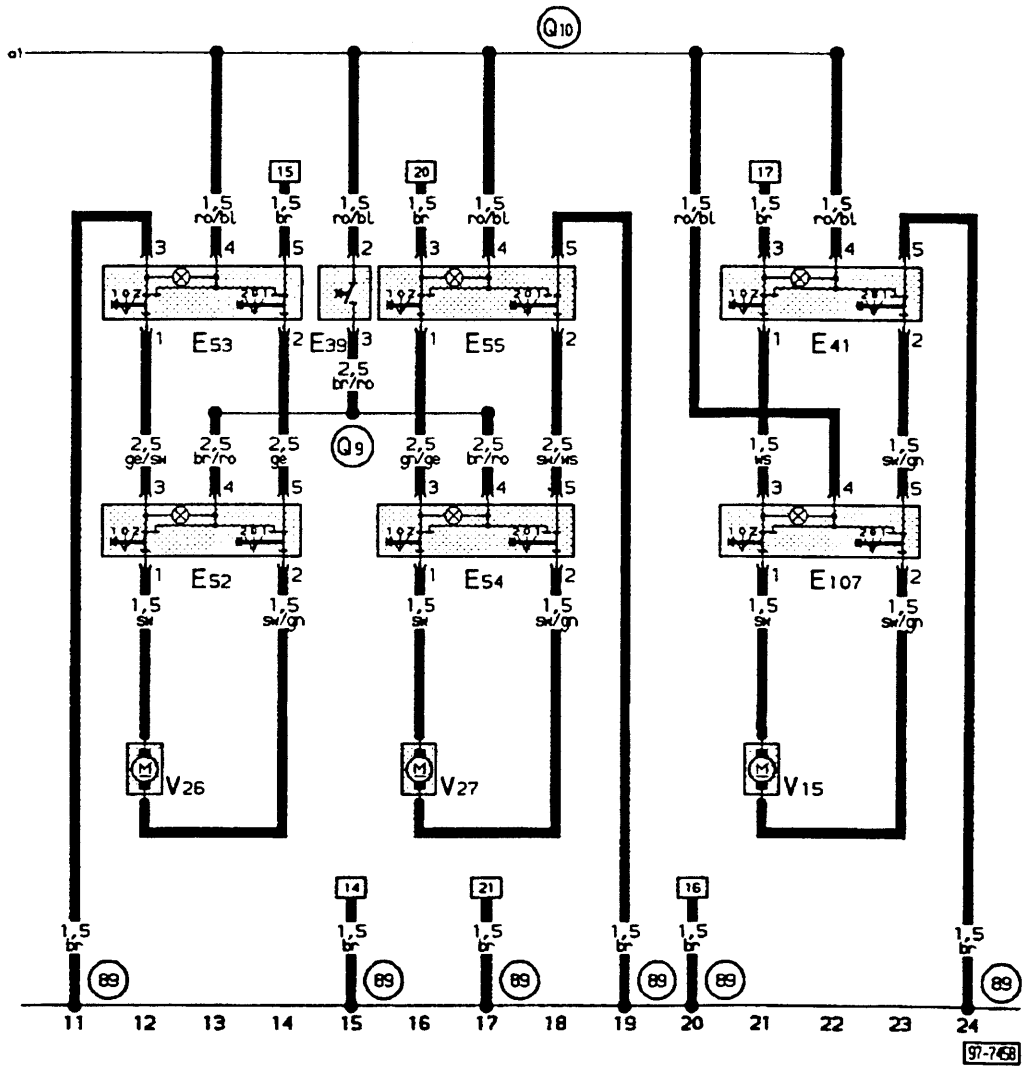

Wiring colours:

bl = blue
br = brown
ge = yellow
gn = green
gr = grey
li = purple
ro = red
sw = black
ws = white

E 39 – Rear window lifter isolation switch
E 41 – Window lifter switch, front right
E 52 – Rear left window lifter switch (in door)
E 53 – Rear left window lifter switch (in console)
E 54 – Rear right window lifter switch (in door)
E 55 – Rear right window lifter switch (in console)
E 107 – Switch for window lifter (in passengers' door)
V 15 – Window lifter motor, right
V 26 – Window lifter motor, rear left
V 27 – Window lifter motor, rear right

(89) – Earth connection – 1 –, in window lifter wiring loom

(Q9) – Connection in window lifter wiring loom

(Q10) – Positive (+) connection (87), in window lifter/central locking and door contact switch wiring loom