Windscreen wash/wipe, headlight washer system, heated washer jets, horn

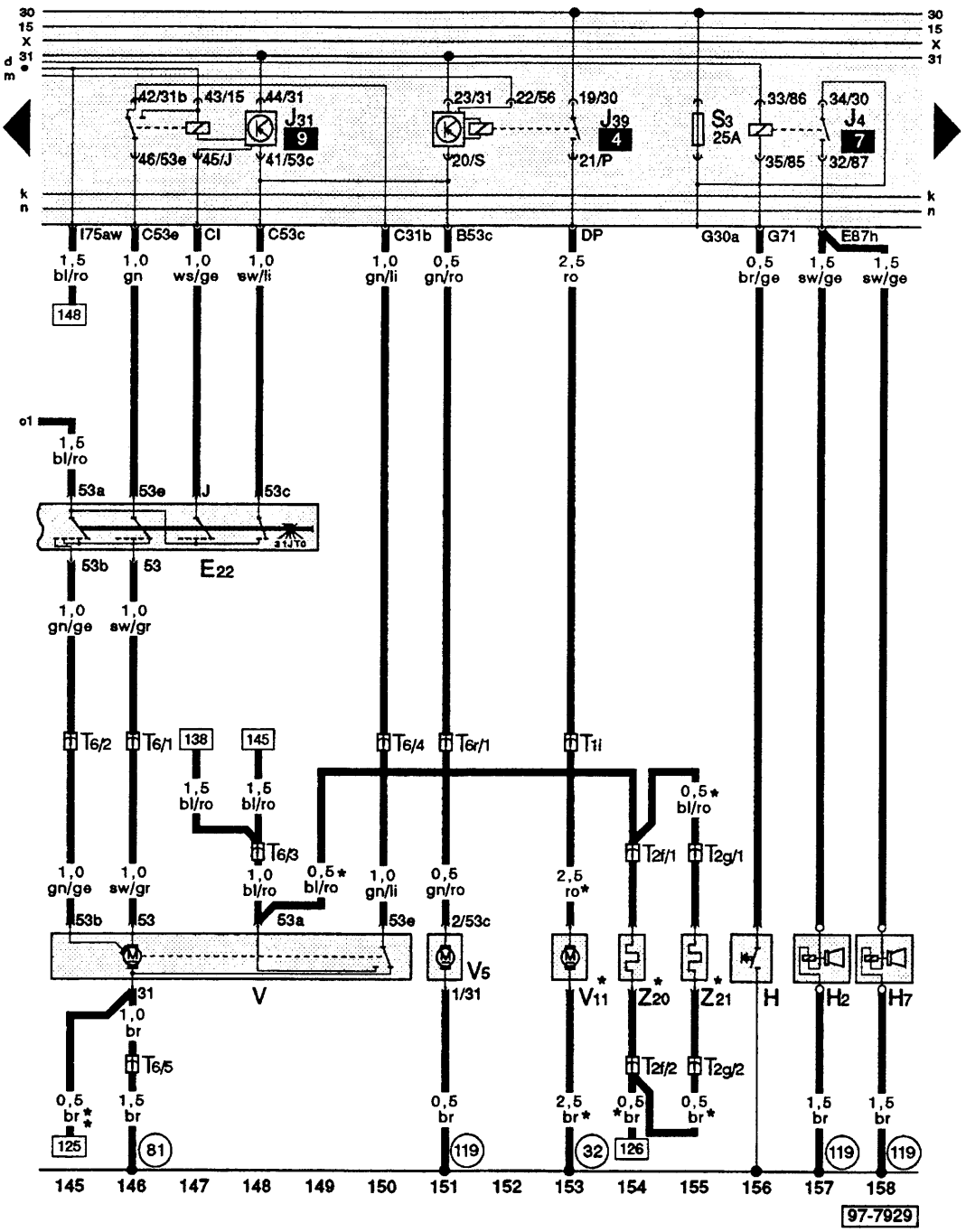

Wiring colours:

bl = blue
br = brown
ge = yellow
gn = green
gr = grey
li = purple
ro = red
sw = black
ws = white

E 22 – Intermittent wiper switch
H – Horn plate
H 2 – High tone horn
H 7 – Low tone horn
J 4 – Dual tone horn relay
J 31 – Intermittent wash/wipe relay
J 39 – Headlight washer system relay
T 1i – Connector single, white, behind dash panel, left
T 2f – Connector 2 pin, near washer jet
T 2g – Connector 2 pin, near washer jet
T 6 – Connector 6 pin, black, connector point in aux. relay carrier
T 6r – Connector 6 pin, black, behind dash panel, left
V – Windscreen wiper motor
V 5 – Windscreen washer pump
V 11 – Headlight washer pump
Z 20 – Heater resistance left washer jet
Z 21 – Heater resistance right washer jet

(32) – Earth point, behind dash panel, left
(81) – Earth connection – 1 –, in dash panel wiring loom
(119) – Earth connection – 1 –, in headlight wiring loom
* – only with heated washer jets/headlight washer system
** – only with engine compartment light